Connectors

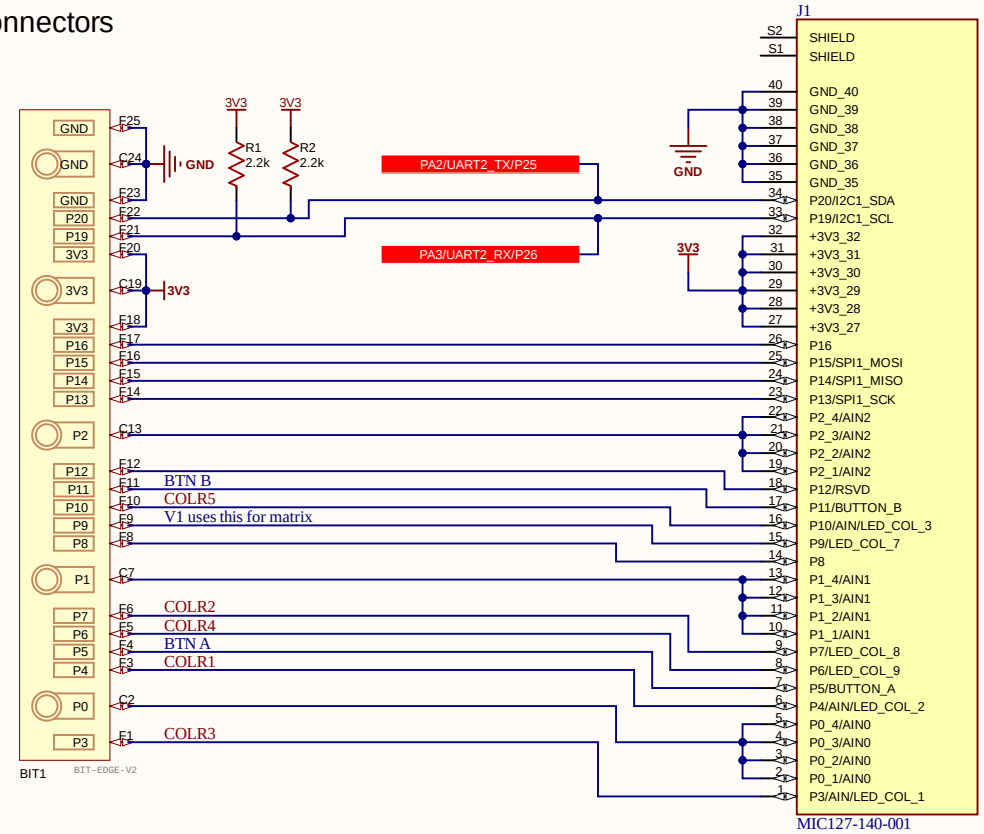

Title: *LinkBit*			
Part #: GDL-ADLINKBIT-A			
Revision: A	Date: 10/27/2025	Sheet 1 of 3	

©2025 GHI Electronics, LLC - Michigan, USA

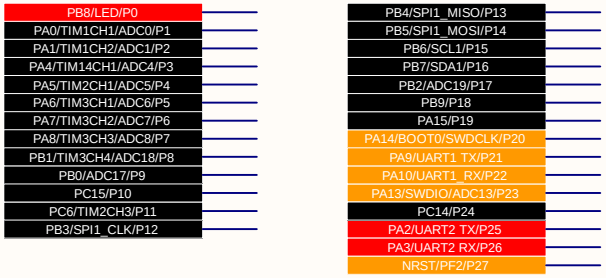

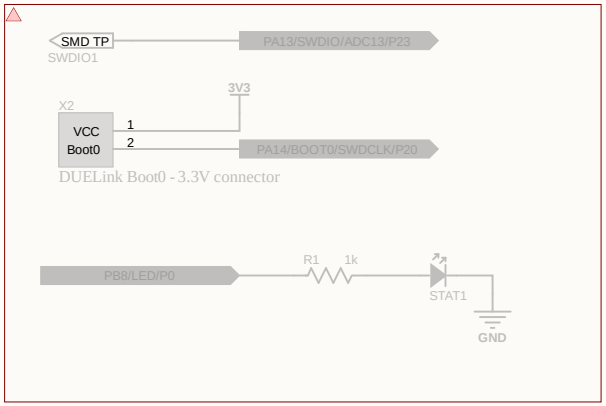

FID1 Fiducial 40 Mil

FID2 Fiducial 40 Mil

FID3 Fiducial 40 Mil

FID4 Fiducial 40 Mil

FID5 Fiducial 40 Mil

FID6 Fiducial 40 Mil

Title: *MISC*		
Part #: N/A		
Revision: A	Date: 10/27/2025	Sheet 2 of 3

©2025 GHI Electronics, LLC - Michigan, USA

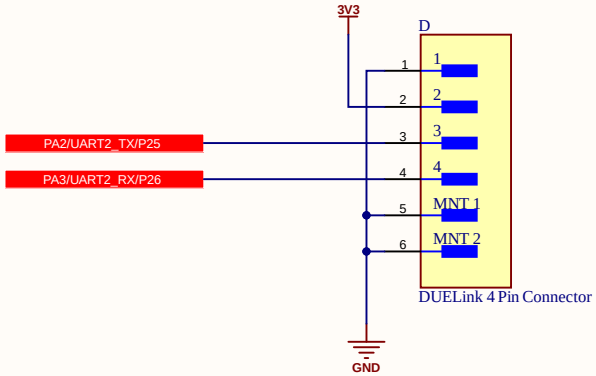

Downlink Device

Title: *DUELink Downlink*			
Part #:			
Revision: A	Date: 10/27/2025	Sheet 3 of 3	

©2025 GHI Electronics, LLC - Michigan, USA