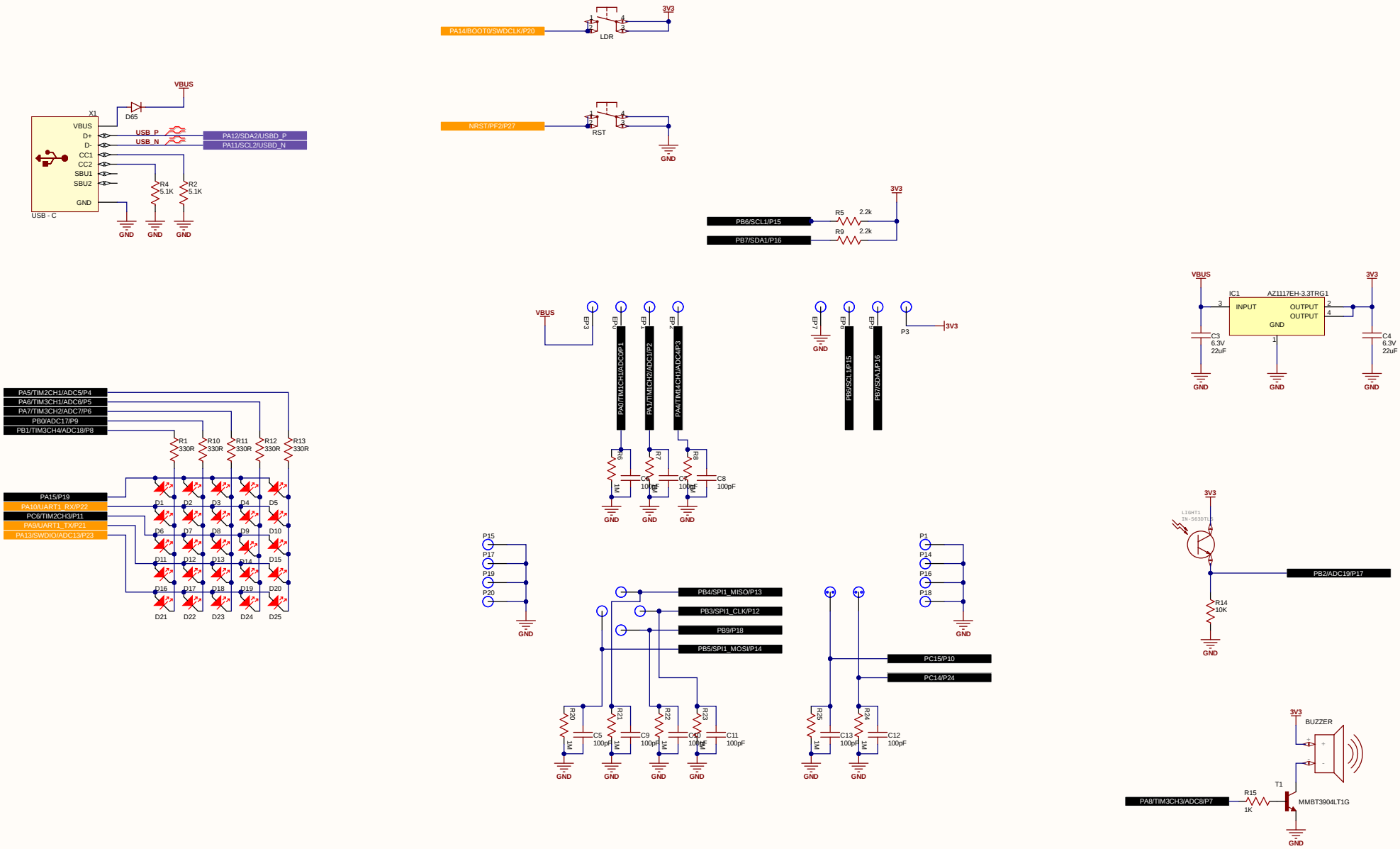


| | | | |
|---|---|---|---|
| Title: *ClipIt* | | | |
| Part #: GDL-MCCLIPIT-B | | | |
| Revision: B | Date: 8/11/2025 | Sheet 1 of 4 | |

©2025 GHI Electronics, LLC - Michigan, USA

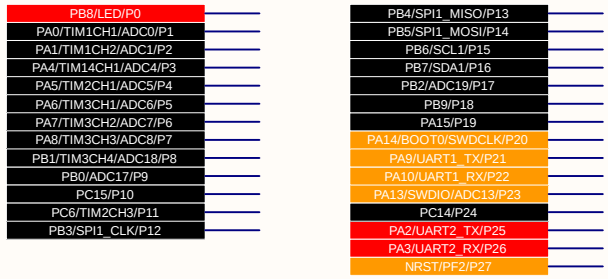


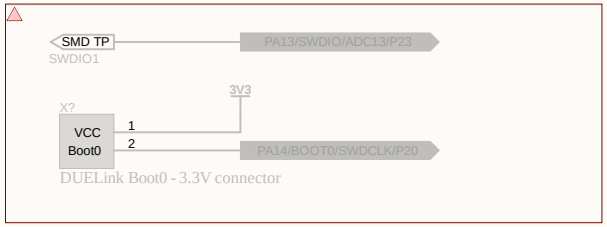


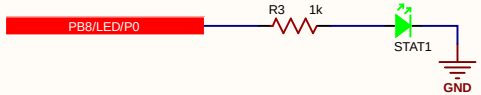


FID1 Fiducial 40 Mil

FID2 Fiducial 40 Mil

FID3 Fiducial 40 Mil

FID4 Fiducial 40 Mil

FID5 Fiducial 40 Mil

FID6 Fiducial 40 Mil

| | | |
|---|---|---|
| Title: *Misc* | | |
| Part #: N/A | | |
| Revision: B | Date: 8/11/2025 | Sheet 2 of 4 |

©2025 GHI Electronics, LLC - Michigan, USA

Software Features:

ADC: P1, P2, P3, P4, P5, P6, P7, P8, P9, P17

Touch: Can be any pin but hardware need 100pF + 1Mohm

HW PWM: P1, P2, P3, P4, P5, P6, P7, P8, P11
- * P1, P2: TIM1
- * P3: TIM14
- * P4, P11: TIM2
- * P5,6,7,8: TIM3

SW UART: Pins 1 RX, 2 TX

Wakeup Pins: P1, P3

Interrupts on: P1, P2, P3, P4, P5, P6, P7, P12

UART1 is available when not used in Uplink

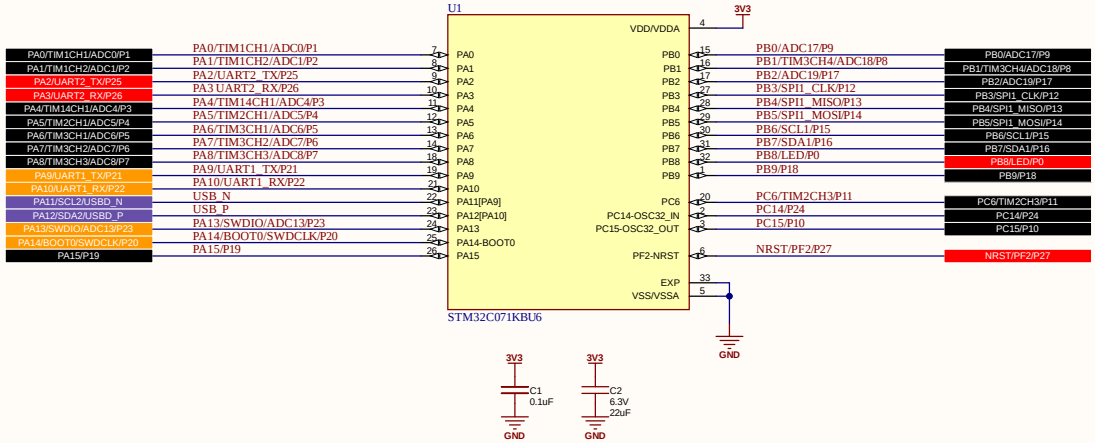


| | | | |
|---|---|---|---|
| Title: *DUELink MCU* | | | |
| Part #: STM32071KBU6 | | | |
| Revision: v14 | Date: 8/11/2025 | Sheet 3 of 4 | |

©2025 GHI Electronics, LLC - Michigan, USA

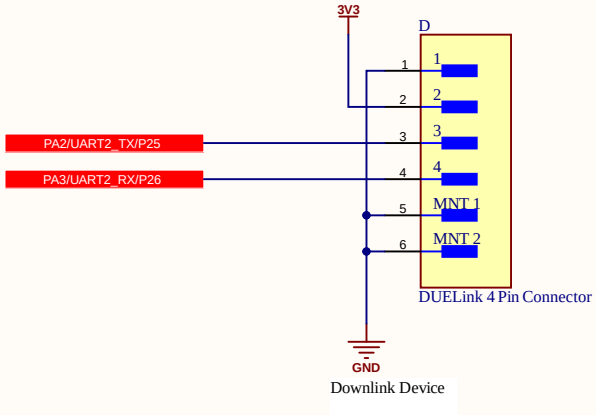


| | | | |
|---|---|---|---|
| Title: *DUELink Downlink* | | | |
| Part #: N/A | | | |
| Revision: A | Date: 8/11/2025 | Sheet 4 of 4 | |

©2025 GHI Electronics, LLC - Michigan, USA